cleanfix

TORO CAS

scrubber dryer

CAS CORDLESS ALLIANCE SYSTEM



operating instructions

Operation, care and maintenance

Dear customer

Congratulations and thank you for purchasing your Cleanfix RA435 scrubber-dryer. You have purchased a Swiss quality product that has been manufactured with the utmost care.

Cleanfix Reinigungssysteme AG
Stettenstrasse 15
CH-9247 Henau

Tel. +41 58 329 45 45
info@cleanfix.com / www.cleanfix.com

1 Contents

2 Symbols....3

3 Read the operating instructions. 3

4 Intended use 3

5 Safety regulations 4

6 Important safety instructions for handling batteries....6

7 Delivery....8

8 Structure and function....9

9 Commissioning.... 10

10 machine operation 12

11 Working method 12

12 Maintenance and cleaning.... 14

13 Help with faults 15

14 Technical data.... 15

15 Environmental protection 16

16 Disposal.... 16

17 Warranty 16

18 CE declaration of conformity 17

19 UKCA Conformity Declaration 18

2 Symbols



General mandatory sign



Study operating instructions

3 Read the operating instructions.

Before using the device for the first time, read these original operating and the safety instructions contained herein. Act accordingly. Keep these operating instructions for later use or for subsequent owners.
This machine will provide excellent service. However, the best results at minimal cost are achieved when:

- the machine is operated with reasonable care.
- the machine is maintained regularly, in accordance with the machine maintenance instructions supplied with the machine.
- the machine is maintained and repaired with original spare parts from the manufacturer.

4 Intended use

The TORO is an industrial/commercial floor cleaning machine for both rough and smooth hard surfaces (concrete, tiles, stone, plastic, etc.). Typical places of use are schools, hospitals/healthcare facilities, hotels, factories, shops, office buildings and retail centers. Do not use this machine on soil, grass or carpeted floors. This appliance is intended for indoor use only. Due to its design and construction, it complies with the relevant essential health and safety requirements of the EU Directives and therefore bears the CE mark.
The relevant EU guidelines according to which the device has been tested can be found in the declaration of conformity. This declaration loses its validity if one or more changes are made to the device without our consent. It is expressly forbidden to operate the device if it is not in perfect condition and before it has been repaired by authorized specialists. Cleanfix reserves the right to make technical improvements as part of model maintenance. Therefore, the device may differ in details from the information in the brochure and the pictures in this manual. Use this device only as described in this user manual.

Please fill out the form during installation.

Model no.: _____

Serial no.: _____

Installation date: _____

5 Safety regulations



Warning

You will receive important instructions for the commissioning, use and maintenance of your machine. In addition to these instructions, the general safety and accident prevention regulations must always be observed! The manufacturer accepts no liability in the event of non-compliance! The operating instructions should always be kept to hand with your machine or at the machine location.



Keep packaging foils away from children - danger of suffocation.

Operating personnel must be adequately trained in the use of this device.

The device contains magnets that may affect medical or other devices such as pacemakers. Be careful when working near such devices! Operators and maintenance personnel with pacemakers should maintain a minimum distance of 15 cm.

Never suck up solvents, explosive gases or liquids. These include petrol, paint thinners, heating oil, solvents, etc., which can form explosive vapors or mixtures when swirled with the suction air.

The use of waxes and dispersions is not allowed and will cause blockages in the pipes.

Use only brushes or accessories supplied or approved by Cleanfix. The use of other brushes may affect safety and durability.

The manufacturer is not liable for any damage caused by improper use or incorrect operation.

If changes are made to the device or the device is used improperly, the warranty will become void.

The device must not be operated by children or by people with a physical, sensory or mental disability, or by people without the necessary experience and knowledge. The device is not a toy. The cleaning and maintenance to be carried out by the user must not be carried out by children without supervision.

Use the device only for cleaning indoors or on covered surfaces. The device must not be used outdoors.

When working with the machine, local conditions must be considered and attention paid to third parties, especially children.

Never use the device in explosive environments.

When cleaning and maintaining your cleaning machine, when changing accessories or when switching to other functions, the machine must be switched off.

The device must be switched off immediately if foam or liquid escapes!

When making repairs or replacing components, the machine must always be disconnected from the battery! Always remove the battery!

Repairs may only be carried out by authorized customer service centers or qualified personnel who are familiar with all the relevant safety regulations.

This machine is not equipped with an explosion-proof motor. The motor may produce sparks when starting and during operation, which could cause a surface fire or explosion if the machine is used in an area where flammable vapors/liquids or combustible dust are present.

Use only professional, low-foam cleaning agents. The use of aggressive cleaning agents can damage the device!

Only the device operates at temperatures between 5°C and 50°C.

Do not use liquids that are hotter than 60°C.

Always empty the fresh and dirty water tanks after use and rinse the pipes to prevent blockages caused by detergent deposits.

The device is splashproof, but under no circumstances should it be completely submerged in water or cleaned with a high-pressure cleaner!

To avoid injury, do not step on the machine during the operation.

- Do not charge batteries with a damaged cable. Do not tamper with the plug.
- If the charger's power cord is damaged or broken, it must be replaced by the manufacturer, its service agent or a similarly qualified person in order to avoid a hazard.
- Machines filled with water must not be used or stored at temperatures near freezing.
- Keep hands away from rotating brush.

Before use, all parts must be brought into the position specified in the operating instructions.



Attention!

Destruction filters!

Never suck up sharp objects such as glass splinters, nails, etc. Even setting materials such as plaster or cement can render filters unusable.

Damage to the device due to rain and dirt!

Never use or store the device outdoors!

Risk of electric shock from charger!

Never touch the plug with wet hands.

Never pull the plug out of the socket by the cable; always hold the plug itself.

The power cable must not be kinked, pinched, pulled over sharp edges or driven over, and must not come into contact with heat sources.

If the power cord of this device is damaged, it must be replaced by the manufacturer, its customer service or a similarly qualified person in order to avoid danger.
Danger to life!

Do not use damaged extension cords.

6 Important safety instructions for handling batteries

Safety instructions!

Before using the battery packs, read the operating instructions for the battery packs and the charger carefully and completely. Keep all documents enclosed with the battery pack and charger.

- Protect battery packs from moisture!
- Do not use defective or deformed battery packs!
- Do not open battery packs!
- Do not short-circuit the battery pack contacts!
- Keep battery packs away from children!

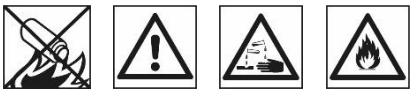

- Do not expose battery packs to open fire or high temperatures!
- Warning of general danger!
- A slightly acidic, flammable liquid may leak from defective Li-ion battery packs!
- If liquid escapes and comes into contact with the skin, rinse immediately with plenty of water. If battery fluid gets into your eyes, rinse them with clean water and seek medical treatment immediately!
- Transportation of Li-ion battery packs: The shipment of Li-ion battery packs is subject to dangerous goods legislation (UN 3480 and UN 3481). Clarify the currently valid regulations when shipping Li-ion battery packs. If necessary, contact your transport company for information. Certified packaging is available from Cleanfix.

Intended use

Battery packs marked CAS are 100% compatible with CAS devices (Cordless Alliance System). To select the correct devices, please contact your dealer. Observe the operating instructions for the devices used. For example, the charging process is indicated by the charger, details of which can be found in the instructions for use of the charger.

The user alone is liable for damage caused by improper use. Generally recognized accident prevention regulations and the safety instructions must be observed.

Use

Charge the battery pack before use.

Do not recharge a fully charged battery pack.

Recharge the battery pack if it loses power.

The optimum storage temperature range is between 10°C and 30°C. The permissible charging temperature range is between 0°C and 50°C.

Li-ion battery packs have a capacity and signal display (depending on the model):

- Press the button and the charge status is indicated by the LED lights.
- If an LED light flashes, the battery pack is almost empty and needs to be recharged.
- **If not used for an extended period, battery packs may enter deep discharge and then cannot be recharged! Therefore, recharge the batteries every 3 to 6 months!**

battery indicator

green:	The battery is fully charged and ready for use.
orange:	The battery is partially discharged and still contains about 70% charge.
red:	The battery is almost empty and still contains about 30% charge and needs to be replaced or recharged.
red flashing:	The battery is low and the device will soon switch off.

Always charge the batteries when the indicator is red!

Environmental protection

- Used battery packs contain large quantities of valuable raw materials and plastics that can also be recycled.



- Battery packs must not be disposed of with household waste!
- Return defective or used battery packs to the CAS dealer!
- Discharge the battery pack in the power tool before disposing of it. Secure the contacts against short circuits (e.g. insulate with adhesive tape).
- Do not throw battery packs into water!

Cleanfix Reinigungssysteme AG
Stettenstrasse 15, 9247 Henau, Schweiz
www.cleanfix.com

We reserve the right to make changes in the interest of technical progress. © by CAS

7 Delivery

Unpack machine

Carefully unpack the device and check the contents of the packaging for completeness (see scope of delivery). If you notice any transport damage, please contact your dealer immediately. Be careful not to tear out any cables or damage them with a knife when unpacking. Keep the packaging in case you need to transport the device in the future (e.g. when moving house, servicing)!

scope of delivery

1x scrubber dryer TORO	Art.-Nr.: 444.000
2x Batteries 18V / 10.0 Ah	Art.-Nr.: 025.511
1x Charger ASC 145 DUO SEV (Switzerland)	Art.-Nr.: 025.512
1x Charger ASC 145 DUO VDE (export)	Art.-Nr.: 025.513
1x Standard brush set of 2	Art.-Nr.: T000413
1x front and rear rubber blade	Art.-Nr.: T000411
1x suction nozzle	Art.-Nr.: T000287
1x protection framework	Art.-Nr.: T000290
1x mudguard	Art.-Nr.: T000291
5x round-head screw M5x12	Art.-Nr.: T000292
2x Hexagon socket screw with Torx M5x35	Art.-Nr.: T000293
2x Hexagon socket screw with Torx M5x16	Art.-Nr.: T000294
1x Operating instructions TORO	Art.-Nr.: T000296
1x Operating instructions for battery pack (optional)	Art.-Nr.: 025.560
1x Operating instructions for charger (optional)	Art.-Nr.: 025.565
1x package insert	

Optional accessories

driving disc (optional)	Art.-Nr.: T000412
Pad red, Ø 230 mm (9“)	Art.-Nr.: 705.913.5
Pad blue, Ø 230 mm (9“)	Art.-Nr.: 705.914.5
Pad black, Ø 230 mm (9“)	Art.-Nr.: 705.962.5
Pad white, Ø 230 mm (9“)	Art.-Nr.: 705.963.5
Additional weight on the right	Art.-Nr.: T000317
Additional weight on the left	Art.-Nr.: T000318

8 Structure and function

1	control panel	8	Parking position of the grab rail
2	grip	9	suction hose
3	Charger ASC 145 DUO	10	batteries
4	Waste water cover	11	wheels
5	Fresh water cap	12	Protective frame with light strip
6	fresh water tank	13	suction nozzle
7	wastewater tank	14	Brushes / Pads

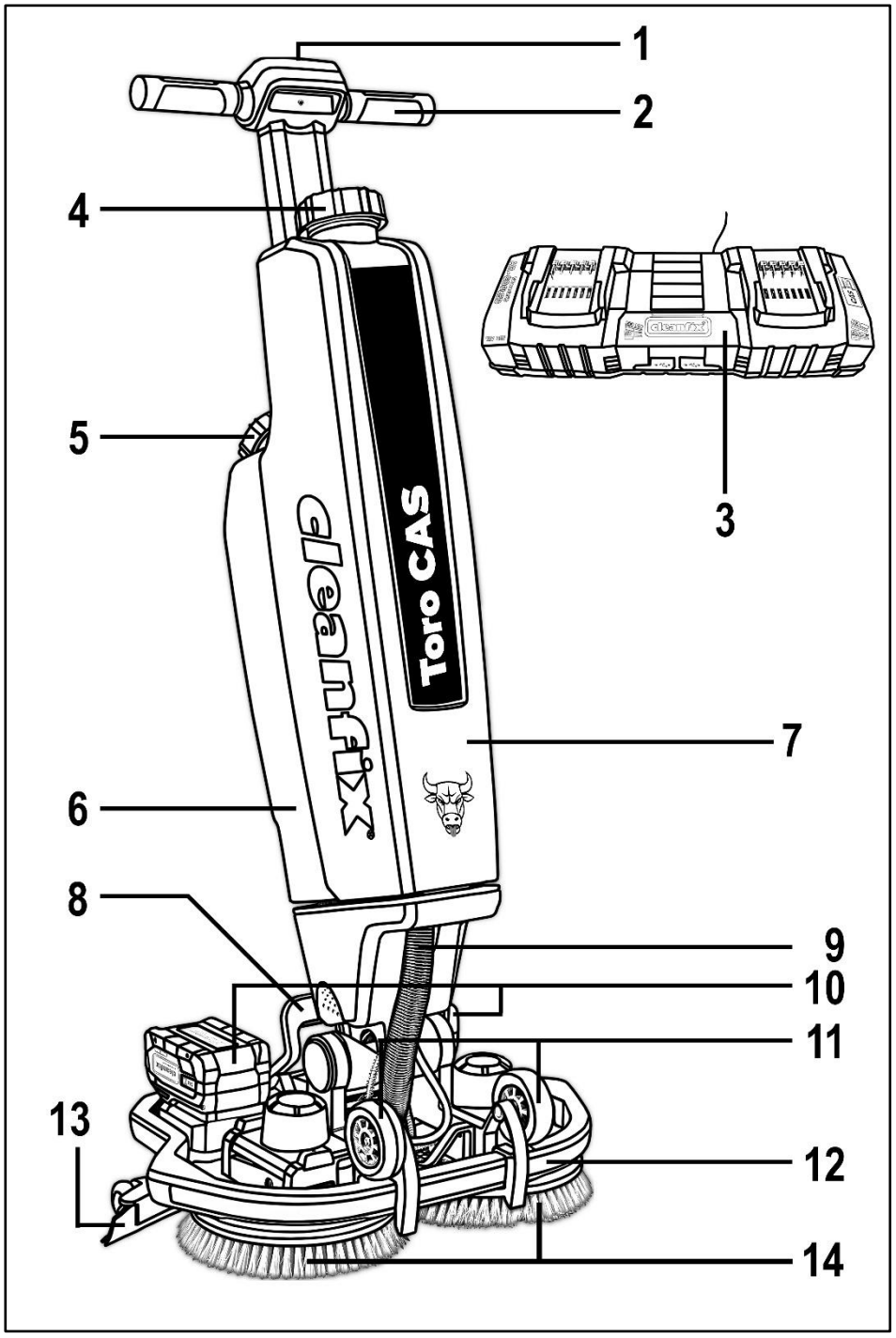

9 Commissioning

Warning **Never use a defective device!**

- **First, assemble the supplied protective frame and the protective plate with the associated screws as described below.**

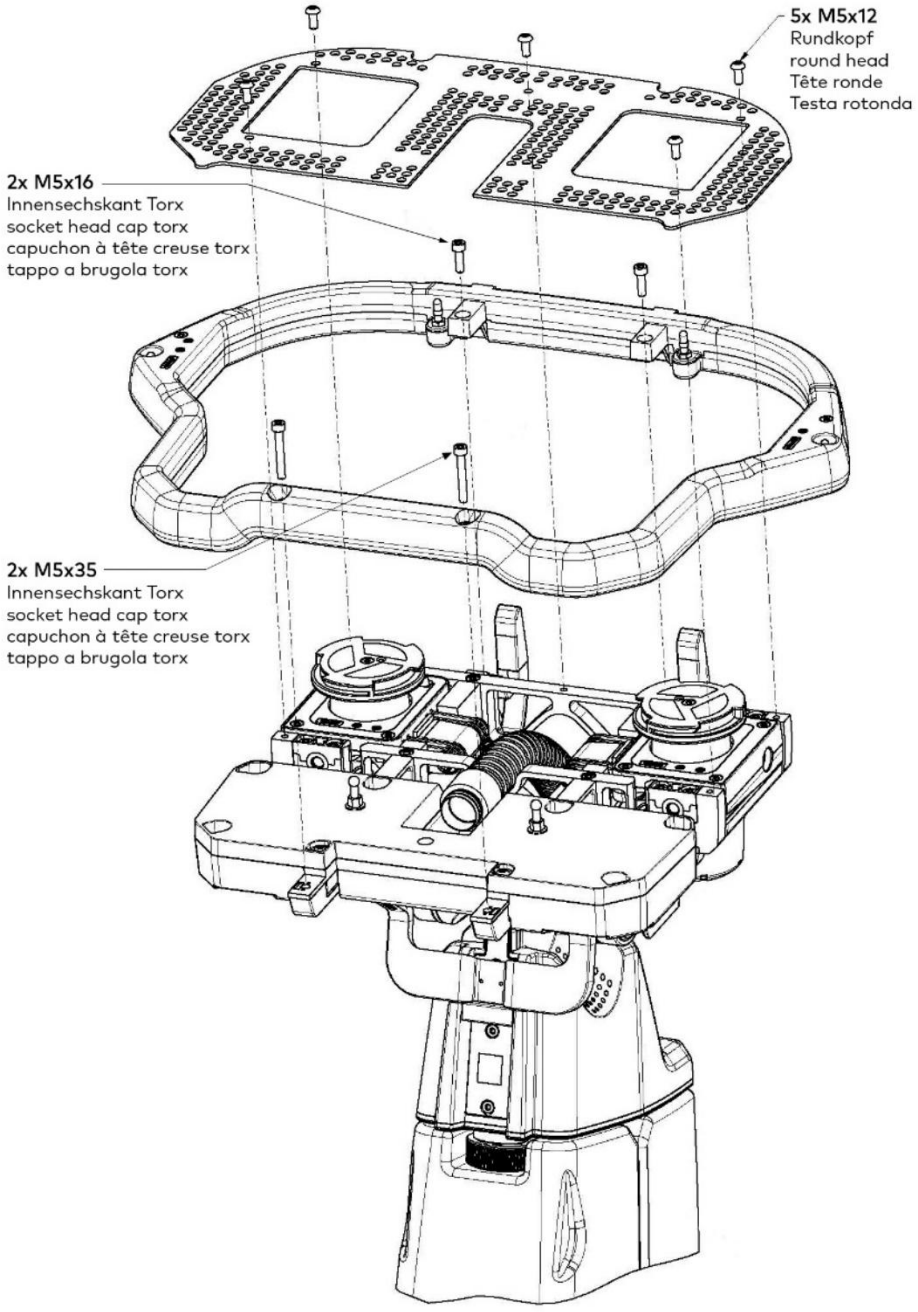

- Charge the battery or batteries fully first. (see page 6)
- Slide the fully charged battery packs into the slots on the device until they audibly engage. (Fig. 1)
- Mount the suction nozzle and the suction hose on the device. (Fig. 2)
- Remove the freshwater tank and fill it. (Fig. 3)
- Attach the included brushes or optionally available drive plates and pads to the machine using a twisting motion. (Fig. 4)
- Switch the scrubber-dryer on and off in working mode with brushes or pads in place, using the control panel on the top of the housing. (see p. 12) **The machine has a safety device and cannot be switched on in the park position!**
- By activating the boost mode (D) on the control panel, the power can be increased for a desired period to better remove stubborn dirt. (see page 12)
- The control panel has a display showing the charge level (C) of the battery pack. (see page 12)

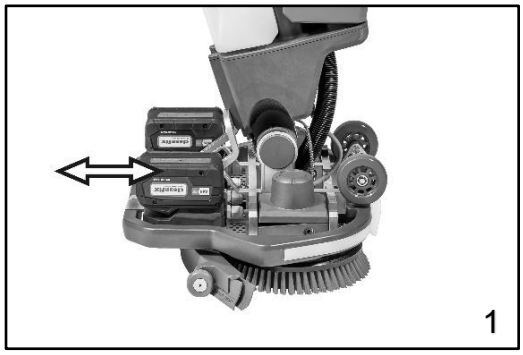
1


2

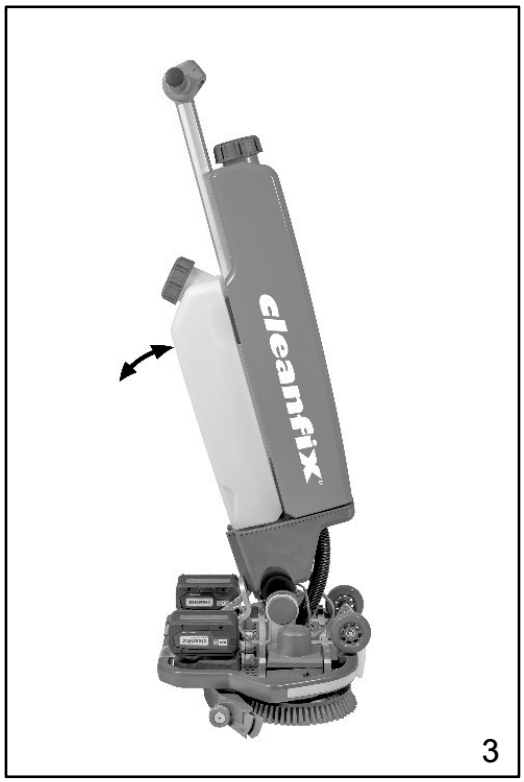

3

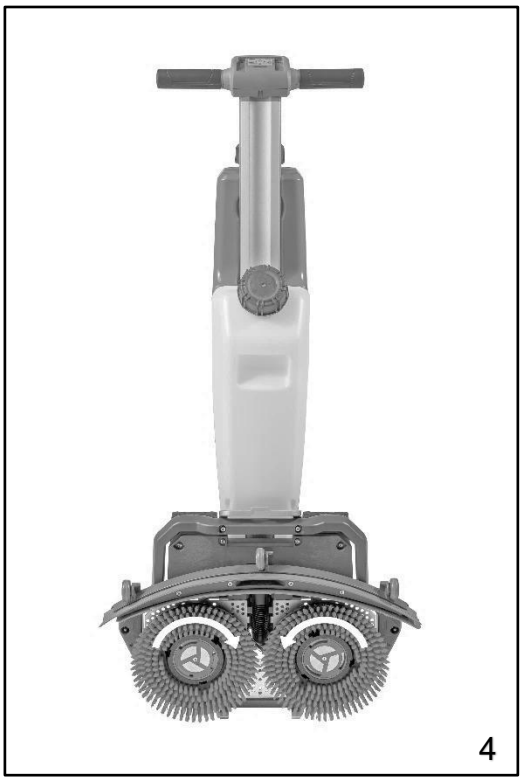
4

10 machine operation

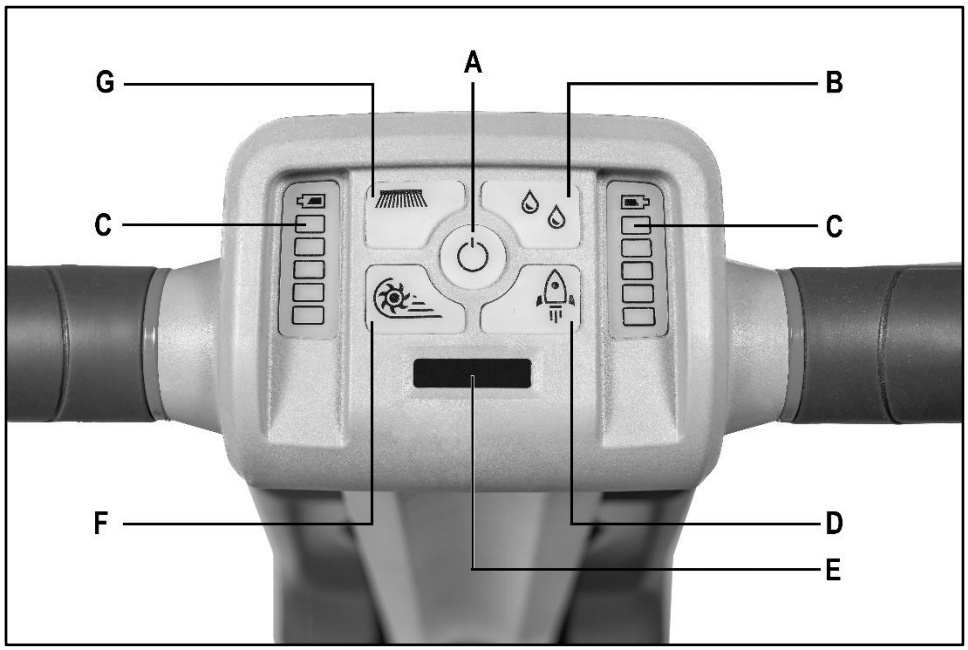

A	Main switch on/off	E	digital display
B	Water supply on/off - quantity	F	Suction motor on/off
C	Battery status left + right	G	Brush motors on/off
D	boost mode		

11 Working method

Preparation

The surface to be cleaned must be swept to remove coarse, loose impurities in advance. Otherwise, foreign bodies will get caught under the lamellae of the suction nozzle, which could result in scratches in the floor covering.

surface cleaning

After you have filled the water tank with fresh water and the correct dosage of cleaning agent, and checked that the dirty water tank is empty, turn on the machine with button “A”. Now activate the water supply, the brush motors and the suction motor using buttons “B, F and G”. By pressing and holding the water supply button “B”, you can regulate the amount of water in two stages. You can now start cleaning the floor. Use the machine slowly and move the handle to steer the machine evenly.

Tips for optimal use

- Move the machine slowly over the floor to achieve the best cleaning result.
- For stubborn stains, let the machine scrub in the same place for a while.
- Make sure that the brushes or pads are checked regularly for wear and tear to avoid damaging the floor coverings.

Emptying wastewater

A float (Fig. 5) is installed in the recovery tank that lifts a ball in front of the suction when the tank is full, shutting it off. This is indicated by the suction motor becoming louder and the suction power failing. Switch off the machine immediately and empty the recovery tank as described below.

→ Switch off the machine and move it to the park position.

→ Remove the wastewater tank by pulling on the tank to release the holding magnets. Unscrew the lid with the float and filter and dispose of the wastewater in an appropriate, authorized location.

→ Thoroughly rinse and clean the dirty water tank and filter.

→ Then reattach the tank to the machine.

⚠ **If foam and/or water escapes from below the tank or tank cap, the machine must be switched off and emptied immediately.**

⚠ **Observe national regulations for the disposal of wastewater. The user is fully responsible for compliance!**

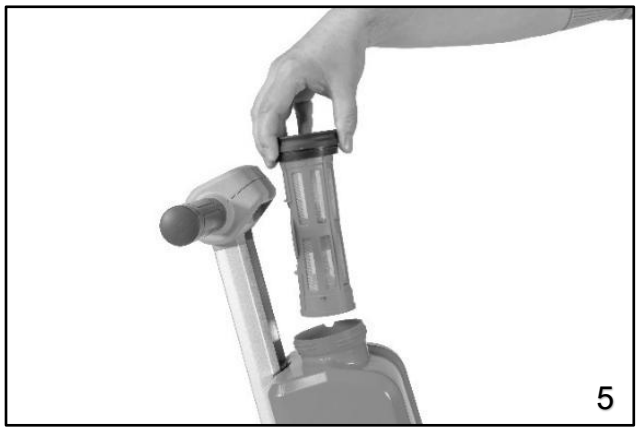

Emptying freshwater

When not in use, also empty the fresh water tank to prevent the formation of odors and to prevent the cleaning agent in the tank from hardening and causing blockages. To do this, proceed as follows:

→ Switch off the machine.

→ Remove the freshwater tank by pulling on the tank to release the holding magnets. Unscrew the cap and dispose of the water in a suitable, authorized location.

12 Maintenance and cleaning

→ Remove both batteries before any maintenance or servicing work!

→ To ensure safety and proper functioning, use only original Cleanfix spare parts.

- Clean the device and accessories with damp cloth after use.
- Empty both tanks and rinse thoroughly with fresh water.
- Check and clean the filter. Replace the filter if it is damaged!
- Clean the suction nozzle and check the wiper blades for wear. If streaks appear during cleaning after vacuuming, the blades must be replaced.
- Rinse brushes or pads thoroughly after each use, clean them and check for wear.
- Check that the nozzles, suction nozzle and hose are not blocked.
- In the event of a repair, please contact your specialist dealer or one of the authorized service workshops. You will be served quickly and professionally.
- Store the device in a dry place.

Our products have been tested for safety at the factory.

maintenance suction nozzle

The wiper blades on the suction nozzle will wear out over time.
Remove the wiper blades by pressing the black button next to the hose connection while pulling on the blade. (Fig. 6)

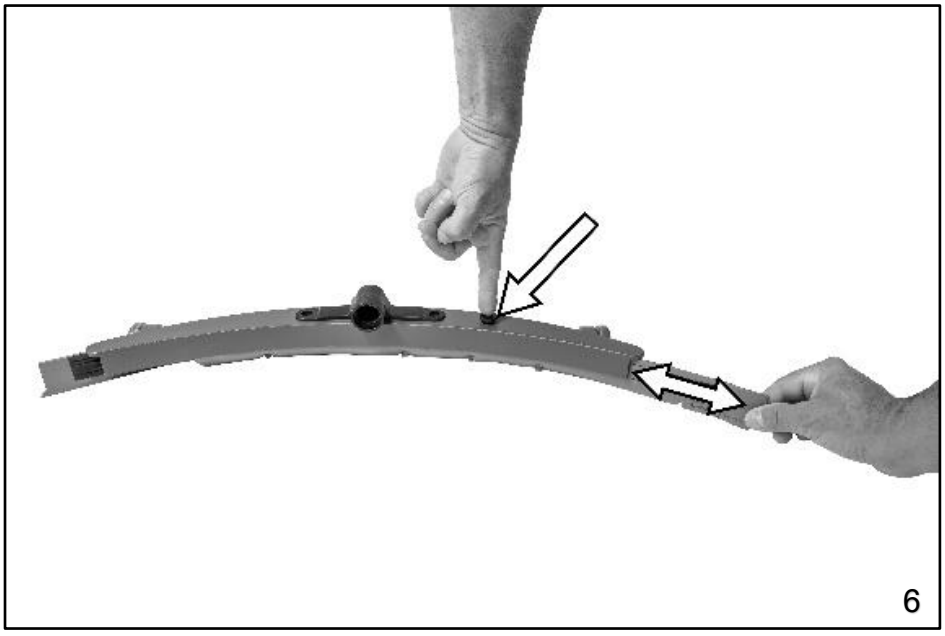

6

13 Help with faults

Dear customer,

our products are subject to strict quality control. If this device still does not work properly, we are very sorry. Before contacting our customer service, please check whether one of the errors listed below is present.



Warning

Before you start troubleshooting, turn off the device and remove the batteries to prevent it from being turned on accidentally.

error	**Possible cause**	**possible solution**
Device does not start.	The batteries are empty	Charge batteries.
	Batteries are not properly attached.	Insert batteries correctly.
The device does not pick up dirt.	Suction hose is blocked.	Clean the suction hose.
	The filter is dirty.	Clean or replace the filter.
Poor cleaning performance	Brushes or pads heavily soiled or worn.	Clean or replace brushes or pads.
water leakage	Seals defective or dirty.	Clean the seals and replace if necessary.

14 Technical data

Rated voltage	2x 18 V
Rated power	600 W
Battery technology	Li-Ion
Battery capacity	10.0 Ah
Battery life: complete (2x 10Ah)	70 Min. / 45 Min. in boost mode
Charger	ASC 145 DUO / 220-240 V
Charging time 10 Ah	75 min
Weight ready for use incl. 2 batteries	23.8 kg
Dimensions L x W x H	116 x 51 x 38.5 cm
Working width	43 cm
Brush pressure	23.8 kg
Freshwater tank capacity	5l
Contents of dirtywater tank	9l
Sound pressure level	63 dB / 66 dB in boost mode
Protection class	IP65

15 Environmental protection



When disposing of the device, please remember that the packaging materials are recyclable. Please do not dispose of the packaging in the household waste but recycle it.



Waste equipment contains valuable recyclable materials that should be sent for recycling. Batteries, plastics and similar materials must not be released into the environment. Therefore, please dispose of old devices via suitable collection systems. Use the collection point set up in your place of residence for the return and recycling of old electrical and electronic devices, as well as for the return and recycling of rechargeable batteries.

- Batteries must be disposed of separately!
- Contact your local authority or dealer for more information.
- Store the used device and the rechargeable batteries in a childproof place until disposal!

16 Disposal

The packaging and unused cleaning agents must be disposed of in accordance with national regulations. Your Cleanfix partner can assist you with this by arrangement.

The disposal of absorbed dirt water must be carried out in accordance with the national regulations. The user is fully responsible for compliance. After being taken out of service, machines must be returned to the dealer according to the fitted symbols or to be disposed of properly in accordance with national regulations. Your Cleanfix partner can assist you with this after consultation.

The battery must be removed from the machine before it is disposed of properly. Used batteries must be disposed of in accordance with EU-guidelines 91/157/EWG to be disposed of in an environmentally friendly way

17 Warranty

In each country, the warranty conditions issued by our responsible sales company apply. We will repair any faults with your device free of charge within the warranty period if the cause is a material or manufacturing defect. If modifications are made to the device or the device is used improperly, the warranty will be terminated.
In the event of a warranty claim, please contact your dealer or the nearest authorized customer service center with proof of purchase.

18 CE declaration of conformity

ACCORDING TO EC MACHINE GUIDELINES 2006/42/EG, APPENDIX IIA

The manufacturer / distributor
Cleanfix Reinigungssysteme AG, Stettenstrasse 15, 9247 Henau Switzerland
hereby declares that the product:

Toro CAS

Identification number: 044.000, 044.000VDE, 044.000SEV

Meets the requirements of the above directive.

Other applied standards and guidelines:

- EN IEC 55014-1:2021
- EN IEC 55014-2:2021

- EU RoHS Directive 2011/65/EU
- Machinery Directive 2006/42/EG
- EMC Directive 2014/30/EU

In the event of a change to the machine not agreed with us, this declaration shall lose its validity.

Authorized representative for the compilation of technical documentation:
Cleanfix Reinigungssysteme AG, Stettenstrasse 15, 9247 Henau, Switzerland

Henau, 21.11.2024



Florian Entner

Cleanfix Reinigungssysteme AG
Stettenstrasse 15
CH-9247 Henau

Tel. +41 58 329 45 45
info@cleanfix.com / www.cleanfix.com

19 UKCA Conformity Declaration

- UKCA CONFORMITY DECLARATION –

ACCORDING TO SUPPLY OF MACHINERY (SAFETY) REGULATIONS 2008

The manufacturer / distributor

Cleanfix Reinigungssysteme AG, Stettenstrasse 15, 9247 Henau, Switzerland

hereby declares that the product:

Toro CAS

Identification number: 044.000, 044.000VDE, 044.000SEV

Complies with the requirements of the above mentioned directive.

Other applied standards and directives:

- EN IEC 55014-1:2021
- EN IEC 55014-2:2021

- EU RoHS Directive 2011/65/EU
- Machinery Directive 2006/42/EG
- EMC Directive 2014/30/EU

This declaration loses its validity if the machine is modified without our agreement.

Authorised representative for compiling the technical documentation:

Cleanfix Reinigungssysteme AG, Stettenstrasse 15, 9247 Henau, Switzerland

Henau, 21.11.2024



Florian Entner

Cleanfix Reinigungssysteme AG
Stettenstrasse 15
CH-9247 Henau

Tel. +41 58 329 45 45
info@cleanfix.com / www.cleanfix.com